# KAB-DS411

## Stainless Steel

### Description

Daosafe Full Height Turnstile, Single Door



### Product Summary

Full height single door turnstile designed to provide entry access solutions for high security applications

### Certification

| | |
|---|---|
| European Norm | No Harmonised European Norm |
| Product Classification | n/a (No Harmonised European Norm) |
| EC Certificate of Conformity No. | n/a (No Harmonised European Norm) |
| Certifire No. | n/a |
| Declaration of Performance | n/a (No Harmonised European Norm) |
| Other Test Evidence | n/a |

**BIM Assist™**

**CE**

**BC(A)R Assist™***

**Guarantee** **3 Years Mechanical**

Last Reviewed 03/07/2025

* ROI Only

*For the purpose of continual product development, KCC reserves the right to change specifications without notice.*
*Please accept all dimensions as approximate. E&OE. © KCC Group 2026.*

*www.thekccgroup.com*

## Description

Daosafe Full Height Turnstile, Single Door

### Features

- Full height turnstile designed to provide entry access solutions for high security single door applications
- Grade 304 brushed stainless steel construction
- The mechanism is equipped with an automatic regulated hydraulic buffer device. No noise and impact when running
- Single directional or Bi-directional is selectable
- Anti-tailing function: Only one person passes at one time
- Entry direction can be controlled manually through lock
- When power is off, turnstille will open automatically
- Green and red LED indicator display passing status
- IP65 waterproof level, indoor & sheltered outdoor use
- Supports integrated with most types of access control systems

### Customisation

- Material option of grade 316 stainless steel
- Rotor option of 90° / 120° (four / three sections)
- Appearance color can be customised based on installation environment
- Dimensions can be customized to meet your request
- Logo can be customized
- Picture: high resolution and scene picture can be customised

*For the purpose of continual product development, KCC reserves the right to change specifications without notice.*
*Please accept all dimensions as approximate. E&OE. © KCC Group 2026.*

*www.thekccgroup.com*

**Technical Characteristics**

- Framework Material: Grade 304 Full Stainless Steel (grade 316 option)
- Dimensions: 1460 x 1250 x 2300mm
- Inner Height: 2080mm
- Passage Width: 666mm
- Passing Direction: Single directional / Bi-directional
- MCBF (Mean Cycles Between Failures) : 10 million
- Power Supply: AC220V/110V, 50/60Hz
- Operation Voltage: 24V DC
- Power Consumption: 40W
- Operation Temperature: -15 °C - +60 °C
- Operation Humidity: 0 ~ 95% (No freeze)
- Weight: 200kg/pcs
- Working Environment: Indoor / sheltered outdoor
- Flow Rate: 30 people per minute
- LED indicator: Two LED indicators - green → entry, red × no entry
- Emergency: Automatic arm open when power off
- Communication: Dry contact, Relay signal, RS485
- Integration: Possible with most access control systems

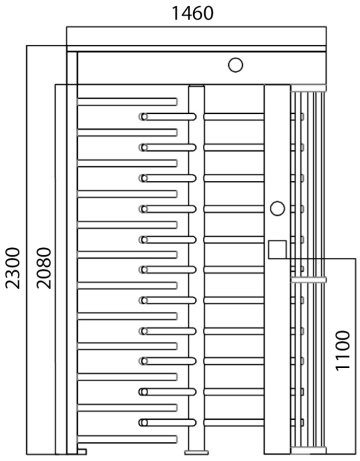


**Front View**

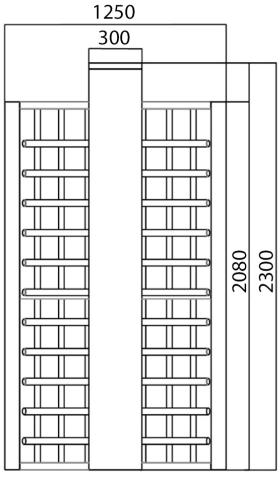


**Side View**

*For the purpose of continual product development, KCC reserves the right to change specifications without notice.*
*Please accept all dimensions as approximate. E&OE. © KCC Group 2026.*

*www.thekccgroup.com*

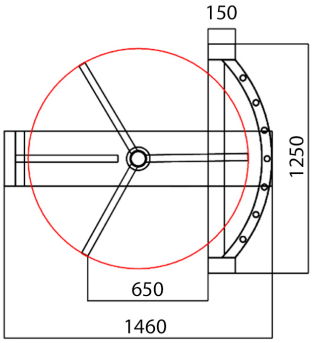


**Top View**

*For the purpose of continual product development, KCC reserves the right to change specifications without notice.*
*Please accept all dimensions as approximate. E&OE. © KCC Group 2026.*

*www.thekccgroup.com*

## Description

Daosafe Full Height Turnstile, Single Door



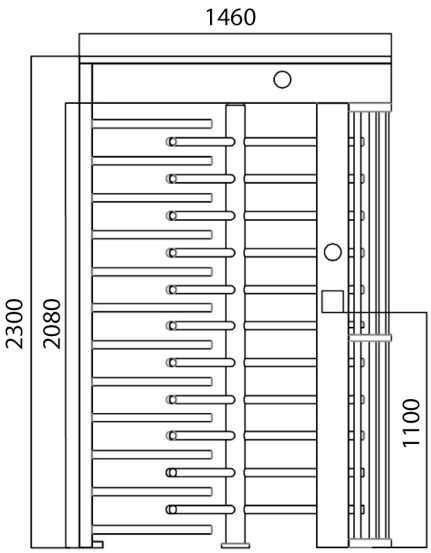


## Specification Text

SENSOR BARRIER / TURNSTILE
· Manufacturer: KCC Group / DaoSafe
- Product reference: KAB-DS411
· Type: Daosafe Full Height Turnstile Single Door
· Framework Material: 304 Full Stainless Steel
· Dimensions: 1460 x 1250 x 2300mm
· Weight: 200kg/pcs
· Passage Width: 650mm
· Arm Support: 120° rotors with 3 sections or 90° rotors with 4 sections
· Passing Direction: Single directional / Bi-directional
· MCBF (Mean Cycles Before Failures): 10 million
· Power Supply: AC220V/110V, 50/60Hz
· Operation Voltage: 24V DC
· Power Consumption: 40W
· Operation Temperature: -15 °C - 60 °C
· Operation Humidity: 0 ~ 95% (No freeze)
· Working Environment: Indoor / Outdoor
· Flow Rate: 30 people per minute
· LED Indicator: Yes
· Emergency: Automatic arm open when power off
· Communication: Dry contact, Relay signal, RS485

*For the purpose of continual product development, KCC reserves the right to change specifications without notice.*
*Please accept all dimensions as approximate. E&OE. © KCC Group 2026.*

*www.thekccgroup.com*